Ratchet and Handle

No. D-1440

Note: Used with Nos. 4PJ, 141 and 161 Threaders. Also fits Toledo-Beaver, Nye & Armstrong 4″ Geared Threaders & Cut-off Tools.

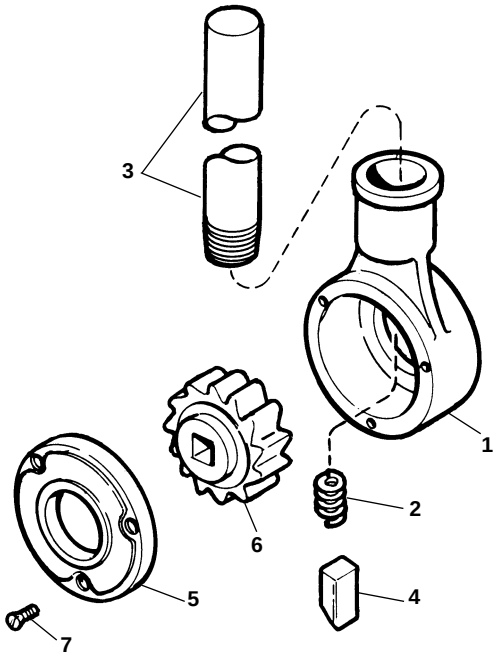

Ref. No.	Catalog No.	Description
1	39390	Ratchet Case
2	38695	Pawl Spring
3	39420	Handle
4	39940	Pawl
5	39800	Ratchet Cover
6	39805	Ratchet Wheel
7	39570	Cover Screw (3)